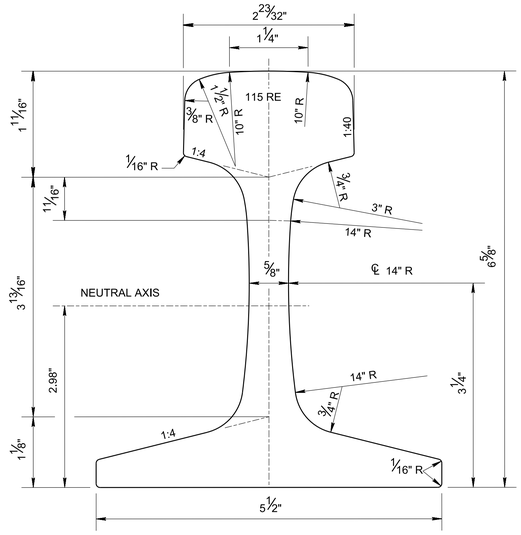

115 LB RE RAIL SECTION

NO SCALE

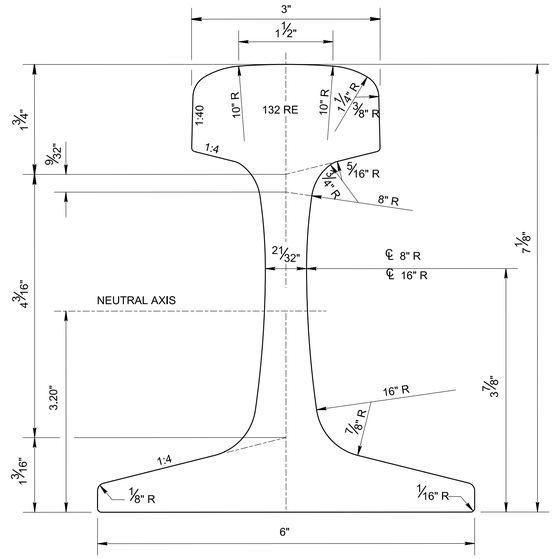

132 LB RE RAIL SECTION

NO SCALE

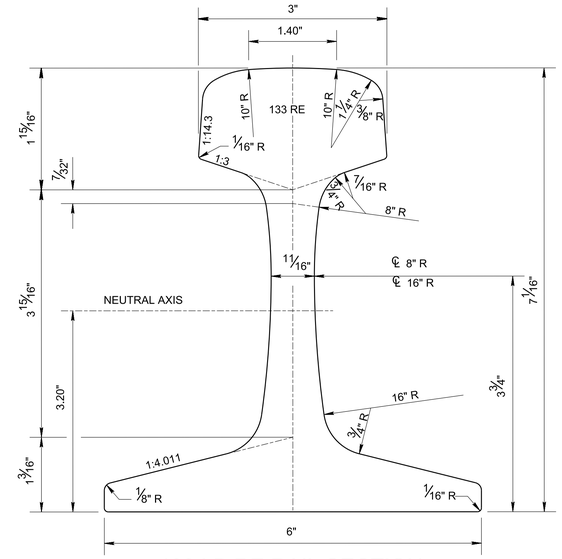

133 LB RE RAIL SECTION

NO SCALE

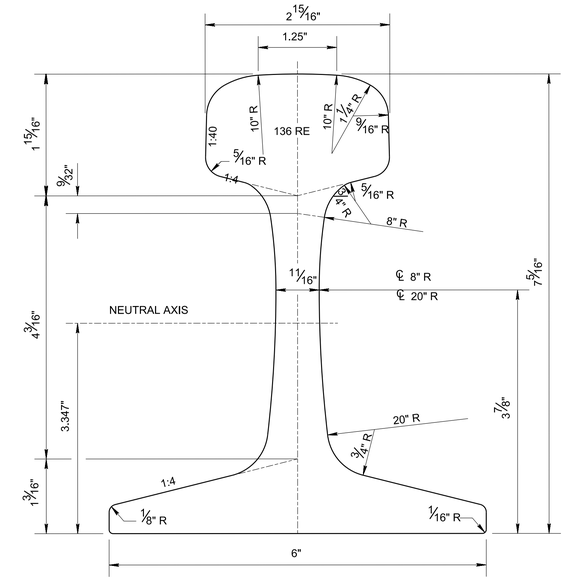

136 LB RE RAIL SECTION

NO SCALE

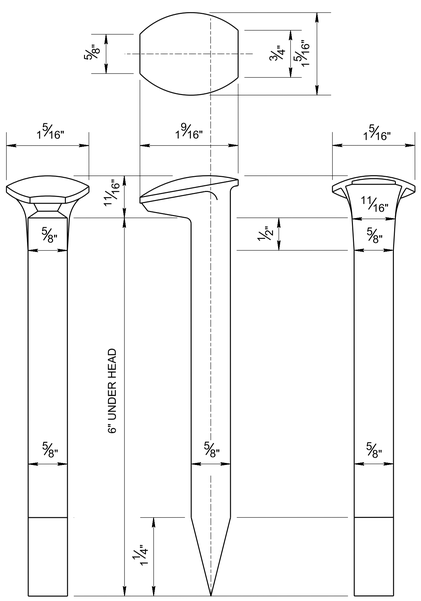

TYPICAL 6" X 5/8" CUT TRACK SPIKE DETAIL

NO SCALE

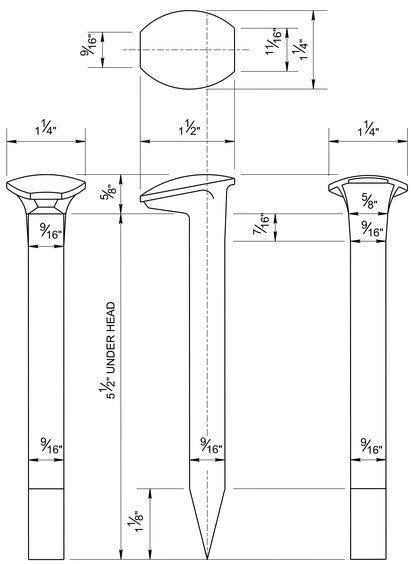

TYPICAL 5 1/2" X 9/16" CUT TRACK SPIKE DETAIL

NO SCALE

$$ - THINK VALUE ENGINEERING - $$

Revisions

Symbol	Descriptions	Date	Approved

U.S. ARMY ENGINEER DISTRICT
CORPS OF ENGINEERS
OMAHA, NEBRASKA

Designed by: X
Drawn by: X
Checked by: X
Reviewed by: X
Submitted by:
Chief: X Section

X X X
X
X

RAIL AND SPIKE DETAILS

COMPUTER AIDED DESIGN & DRAFTING

Plot Scale Ratio: 12:1
Design File: C103.DGN
Spec. No.: DACA 45
Contract No.: DACA 45
Date: DECEMBER 1997
Drawing Code: X
Sheet reference number: C1.03