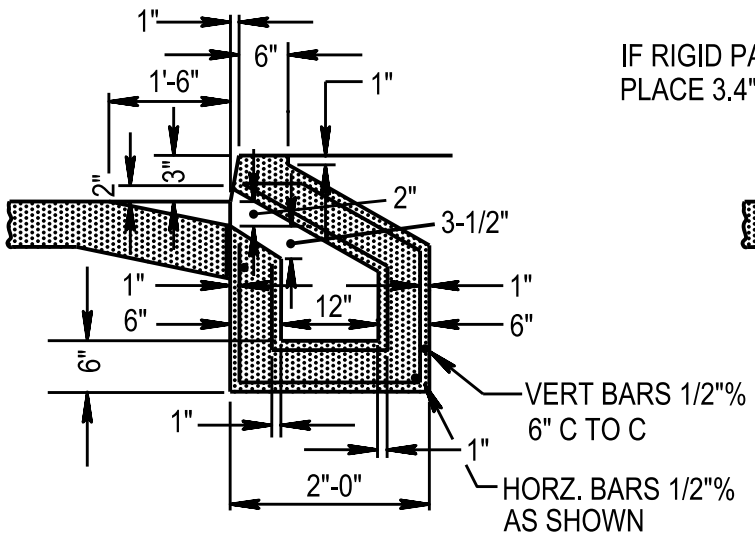

SECTION A-A TYPE "D" INLET
EXTENSION

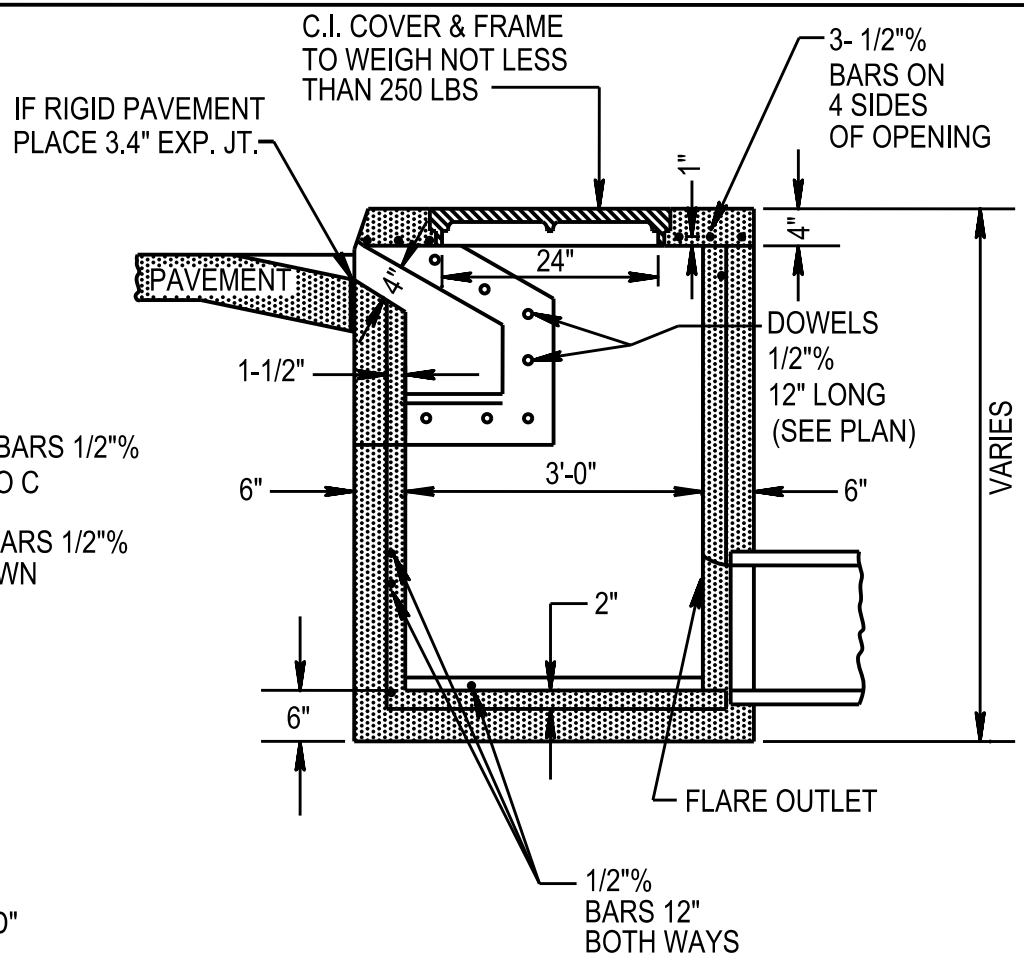

SECTION B-B TYPE "D" INLET
STANDARD TYPE "D" INLET

NOTES: COVER SHALL BE PROVIDED WITH A LOCKING DEVICE, IF REQUIRED, AND OF A TYPE AS ORDERED BY THE CONTRACTING OFFICER. LENGTH OF EXTENSION FOR TYPE "D" INLET, AND THE AMOUNT OF WATER-WAY OPENING, SHALL BE VARIED AS NECESSARY, DEPENDING UPON THE AMOUNT OF WATER TO BE PROVIDED FOR THE LOCATION OF THE INLET, AND LOCAL CONDITIONS.

REFERENCE: TM 5-820-4 DRAINAGE AREAS OTHER THAN AIRFIELDS

TYPICAL CURB INLET	DATE AUG 1992	FIGURE 2-35w