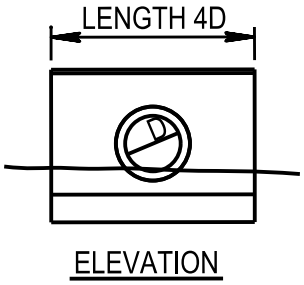

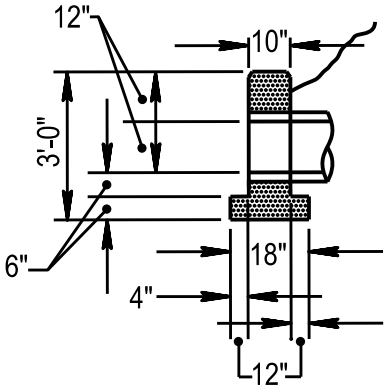

12" PIPE
C.Y. = 0.4

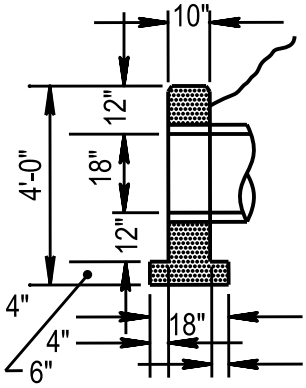

18" PIPE
C.Y. = 0.75

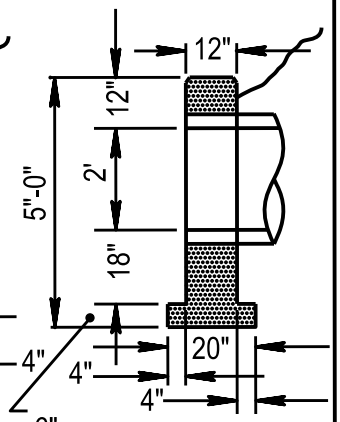

24" PIPE
C.Y. = 1.47

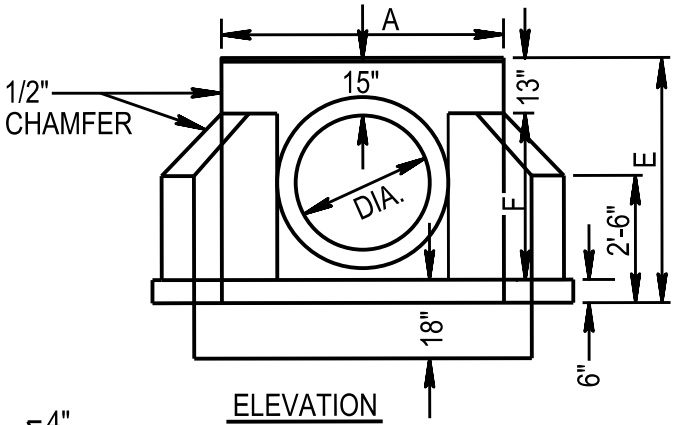

ELEVATION

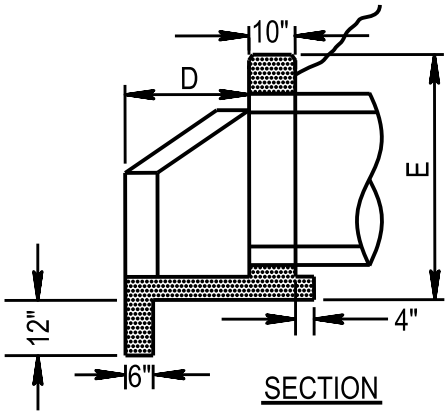

SECTION

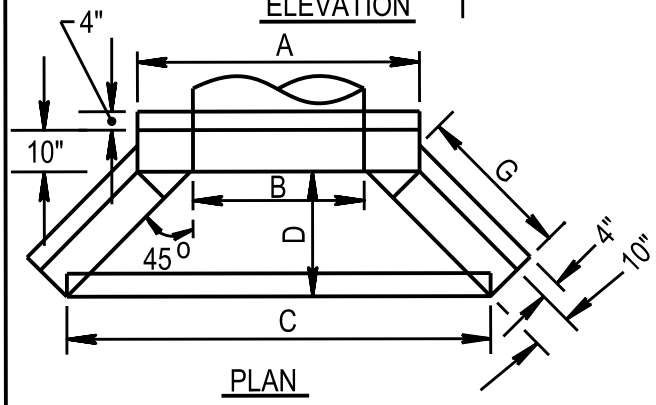

PLAN

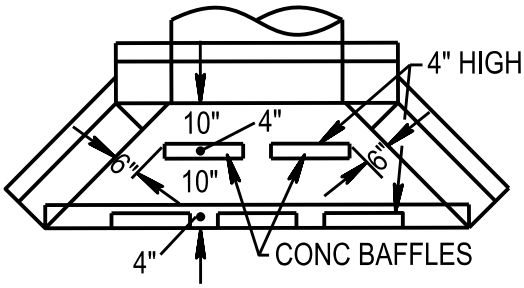

PLAN OF APRON SHOWING BAFFLES FOR 30" PIPE

DIAM OF PIPE	C.Y. CON HEADWALL	A	B	C	D	E	F	G
30"	1.67	5'-6"	3'-2"	7'-10"	2'-4"	4'-9"	3'-8"	2'-5-3/4"
36"	2.24	6'-0"	3'-8"	9'-10"	3'-1"	5'-3"	4'-2"	3'-6-1/2"
42"	2.88	7'-0"	4'-2"	11'-10"	3'-10"	5'-9"	4'-8"	4'-5-1/2"
48"	3.59	7'-6"	4'-9"	13'-10"	4'-7"	6'-3"	5'-2"	5'-6-3/4"

NOTES:

1. REINFORCING MATERIAL MAY BE INSTALLED IN HEADWALL WHENEVER NECESSARY.
2. BAFFLES MAY BE INSTALLED IN HEADWALL APRONS TO BREAK UP EXCESS VELOCITY OF WATER.

REFERENCE: TM 5-820-4/AFM
88-5, CHAPTER 4, DRAINAGE
FOR AREAS OTHER THAN AIRFIELDS

TYPES OF HEADWALLS	DATE AUG 1992	FIGURE 2-35o