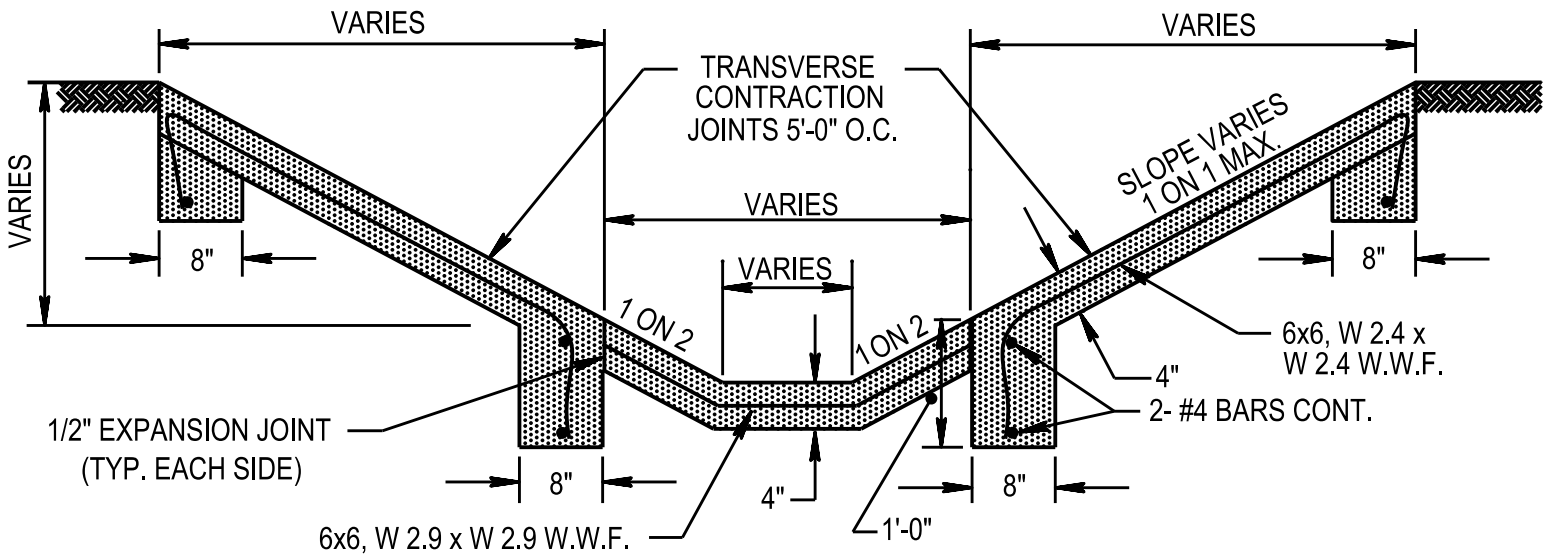

TYPICAL CONCRETE PAVED DRAINAGE DITCH

REFERENCE: TM 5-820-3 DRAINAGE & EROSION CONTROL
STRUCTURES FOR AIRFIELDS AND HELIPORTS

TYPICAL PAVED DRAINAGE DITCH	DATE AUG 1992	FIGURE 2-35s