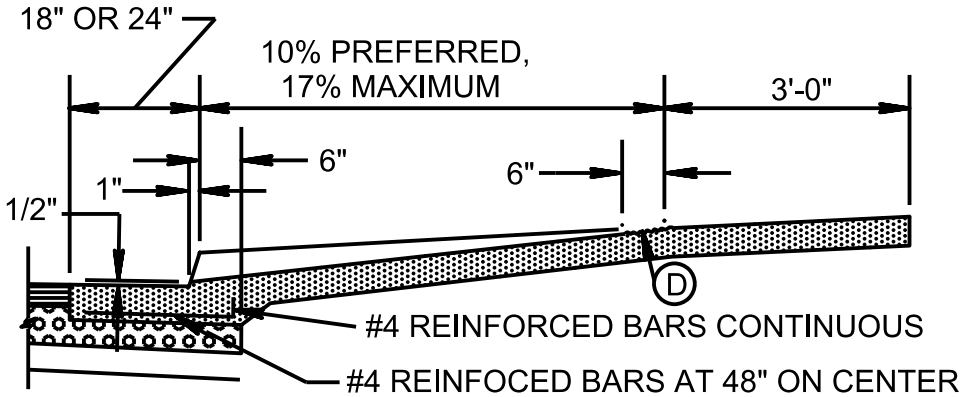

TYPICAL WHEELCHAIR RAMP (A)

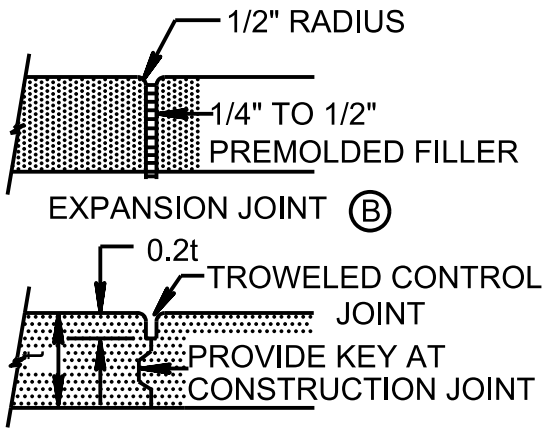

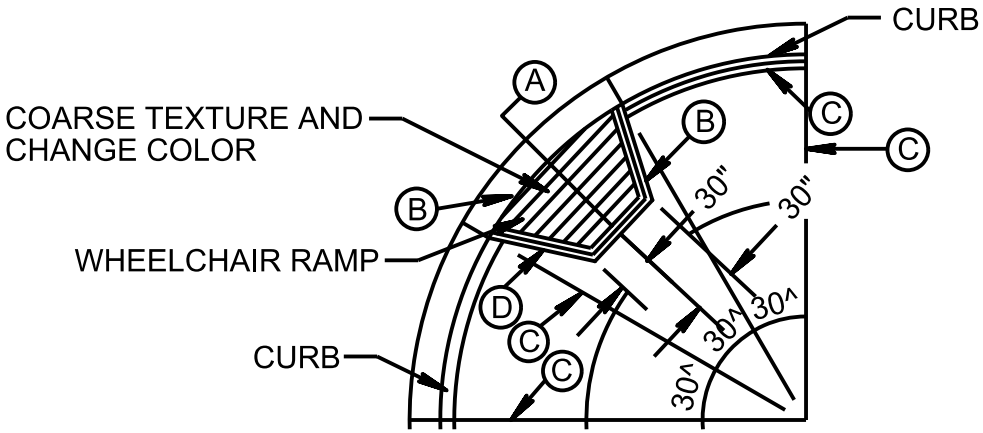

PLAN VIEW

WHEELCHAIR RAMP AT CURB
(ROUND CURB SHOWN IN PLAN.
SECTION TYPICAL FOR ANY
CURB.)

NOTE: FOR (B) AND (C) SEE WALK JOINTS
(D) BORDER WITH 1/4" GROOVES
3/4" ON CENTER.

REFERENCE: DOD 4270.1-M CONSTRUCTION
CRITERIA

WHEELCHAIR RAMP ONTO SIDEWALK AT CURB	DATE AUG 1992	FIGURE 2-32c