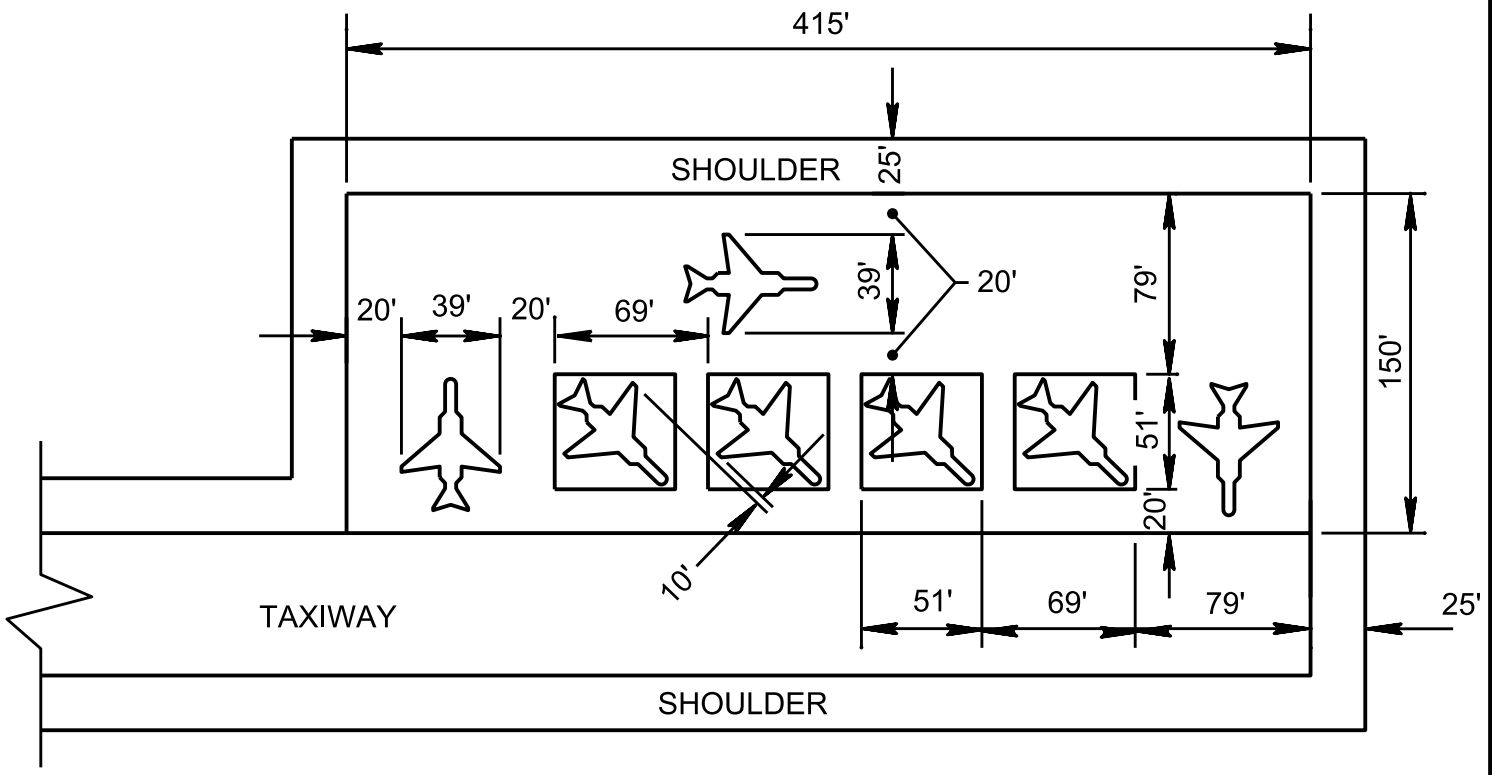

REFERENCE: AFM 86-2, STANDARD FACILITY REQUIREMENTS

ARM-DISARM APRON FOR F-4 FIGHTER	DATE AUG 1992	FIGURE 2-19d