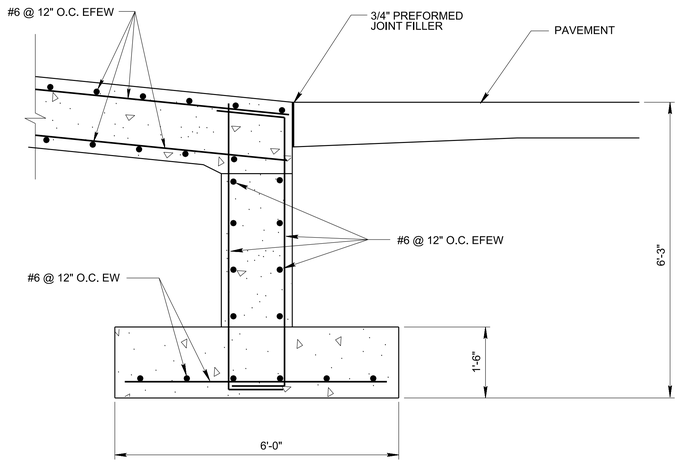

SECTION 2 S1.1 S1.2

SCALE : 3/4 INCH = 1 FOOT

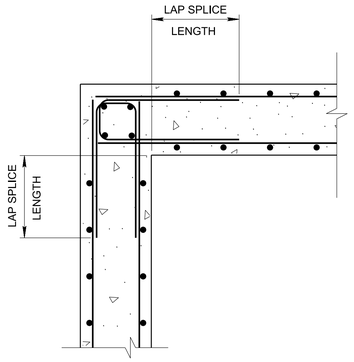

TYPICAL CORNER DETAIL

SCALE : 3/4 INCH = 1 FOOT

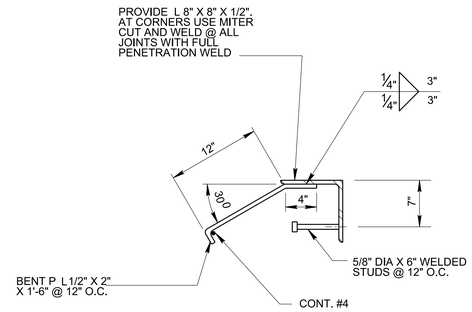

DETAIL A S1.1 S1.2

SCALE 1:10

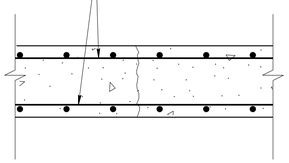

TYPICAL CONSTRUCTION JOINT

SCALE : 3/4 INCH = 1 FOOT

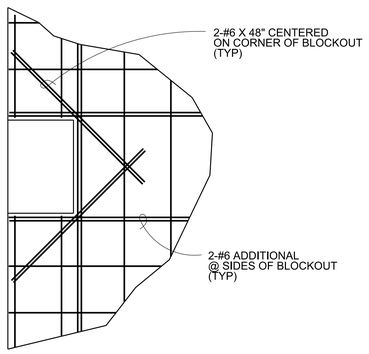

DETAIL B S1.1 S1.2

SCALE : 3/4 INCH = 1 FOOT

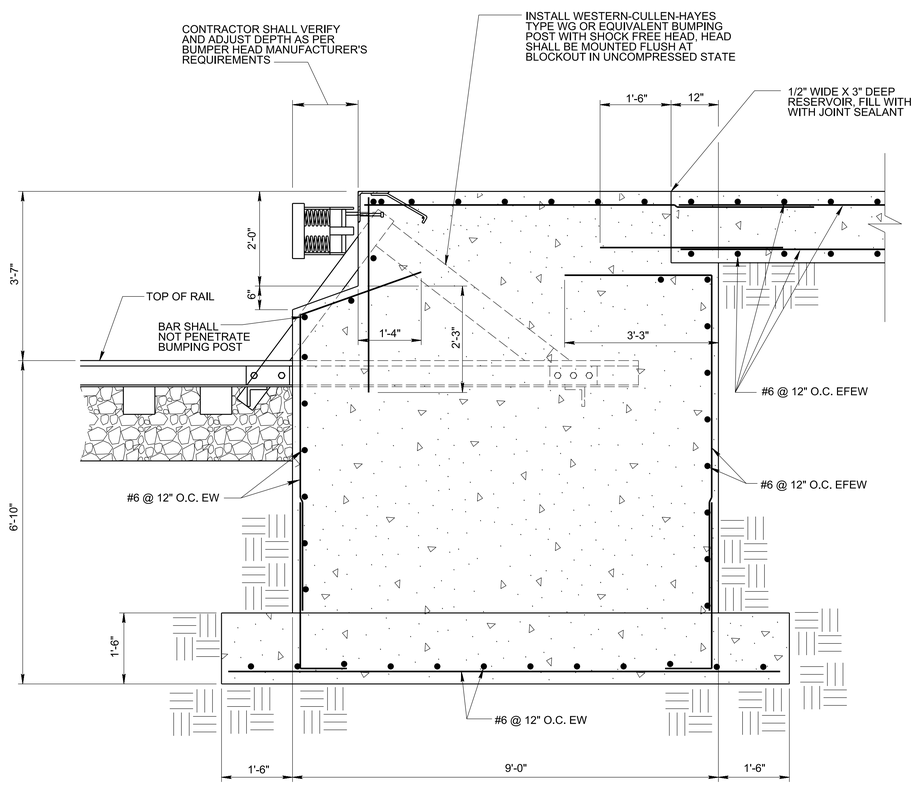

SECTION 4 S1.1 S1.2

SCALE : 3/4 INCH = 1 FOOT

$$ - THINK VALUE ENGINEERING - $$

Revisions

Symbol	Descriptions	Date	Approved

U.S. ARMY ENGINEER DISTRICT
CORPS OF ENGINEERS
OMAHA, NEBRASKA

Designed by: X
Drawn by: X
Checked by: X
Reviewed by: X
Submitted by:
Chief: X Section

X X X X

LOADING RAMP AND DOCK
SECTIONS AND DETAILS

COMPUTER AIDED DESIGN & DRAFTING

Plot Scale Ratio: 3:4
Design File: C112.DGN
Date: JANUARY 1998
Spec. No.: DACA 45
Contract No.: DACA 45
Drawing Code: X
Sheet reference number: C1.12