TRANSVERSE

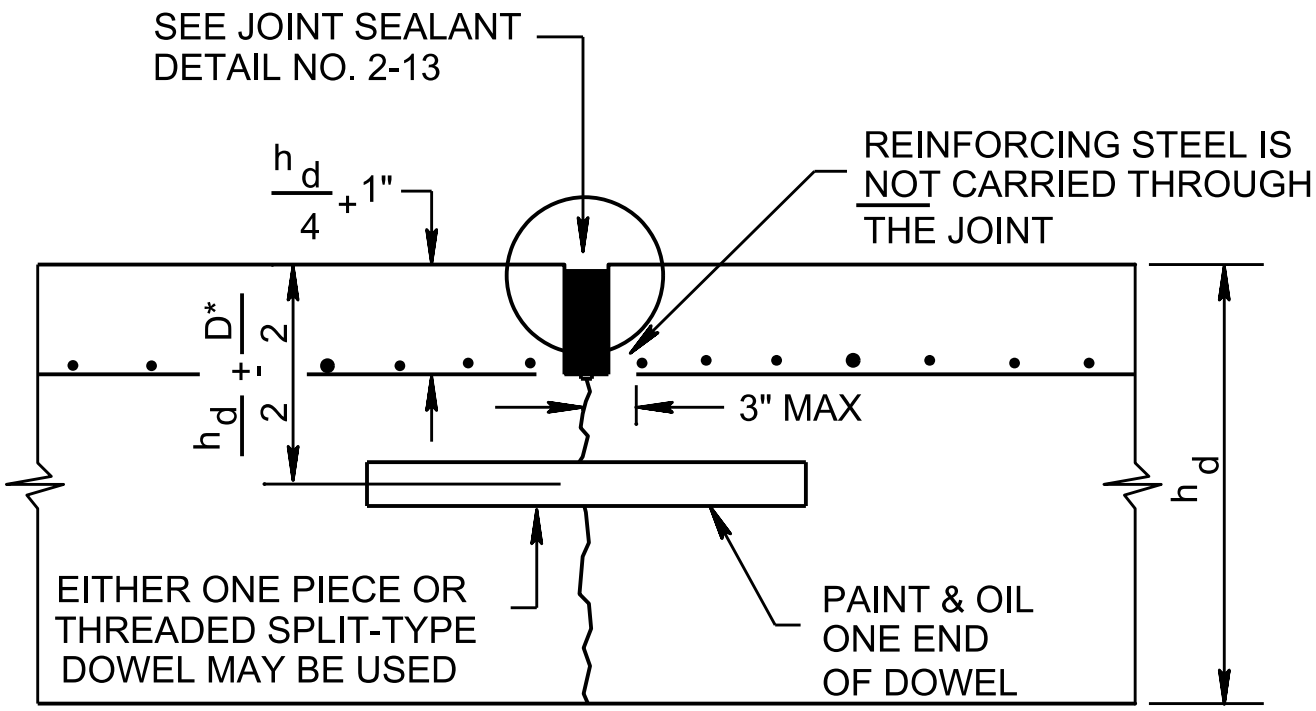

D* DENOTES DOWEL DIAMETER

PAVEMENT THICKNESS IN.	MINIMUM DOWEL LENGTH IN.	MAXIMUM DOWEL SPACING IN.	DOWEL DIA. & TYPE
< 8	16	12	3/4-IN. BAR
8 TO 11.5	16	12	1-IN. BAR
12 TO 15.5	20	15	1-1/4-IN. BAR OR 1-1/ -IN. EXTRA-STRENGTH PIPE 4
16 TO 20.5	20	18	1-1/2-IN. BAR OR 1-1/ -IN. EXTRA-STRENGTH PIPE 2
21 TO 25.5	24	18	2-INCH BAR OR 2-INCH EXTRA STRENGTH PIPE
> 26	30	18	3-INCH BAR OR 3-INCH EXTRA STRENGTH PIPE

REFERENCE: TM 5-825-3/AFM 88-6, CHAPTER 3,
RIGID PAVEMENTS FOR AIRFIELDS

CONTRACTION JT (TRANSVERSE) FOR REINFORCED CONCRETE PAVEMENTS	DATE AUG 1992	FIGURE 2-10a